LOCUS MAP

NOT TO SCALE

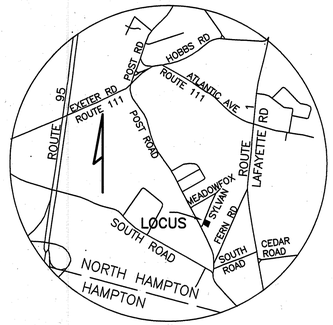

SOIL CLASS: 510 HOOSIC
(SOURCE: USDA–SCS SOIL SURVEY)

BENCH MARKS: DATUM = ASSUMED

#1 SET NAIL DOUBLE TREE EL 50.76

#2 SET NAIL 12" PINE EL 50.17

#3 BOTTOM TRIM @ COR HOUSE EL 53.20

DESIGN INTENT:

THE BOTTOM OF THE EFFLUENT DISPOSAL SYSTEM (EDS) SHALL BE CONSTRUCTED AT ELEVATION 47.7. THIS IS APPROX 2.3' BELOW ORIGINAL GRADE (EL 50) ON THE HIGH CONTOUR OF THE DESIGNED EDS.

SUITABLE REPLACEMENT AREA:

SYSTEM MUST BE REBUILT IN PLACE OR REDESIGNED.

LEGEND:

50	EXISTING CONTOUR
(50)	PROPOSED CONTOUR
50.0	EXISTING SPOT ELEVATION
(50.0)	PROPOSED SPOT ELEVATION

NOTES:

1. THIS PLAN IS NOT TO BE CONSTRUED AS A BOUNDARY SURVEY. PROPERTY LINES SHOWN ARE APPROXIMATED BASED ON INFORMATION FROM THE FOLLOWING SOURCE:
   RCRD PLAN #02783 (1959)
2. NHDES–WS&PCD SUBDIVISION APPROVAL NUMBER: N/A (SUBDIVISION PREDATES 1967)
3. THIS SYSTEM IS NOT DESIGNED TO HANDLE GARBAGE DISPOSAL WASTE.
4. NO SURFACE WATER OR WELL WITHIN 100' OF PROPOSED SYSTEM. (OR HYDRIC SOILS)
5. SITE LOADING: 15400 SF EXIS LOT @ 2000 GPD/AC WITH TOWN WATER, GROUP 1 SOILS, A SLOPE = 0.354 X 2000 = 708 GPD ALLOWED. PROPOSED 4 BEDROOM CAPACITY = 600 GPD
6. EXISTING SEPTIC TANK TO BE INSPECTED FOR PROPER FUNCTION. IF REPAIR IS NECESSARY BUT NOT PRACTICAL, TANK MAY BE FILLED OR REMOVED. ALL EXISTING PIPING TO BE RETAINED MUST BE INSPECTED AND REPLACED AS NEEDED.

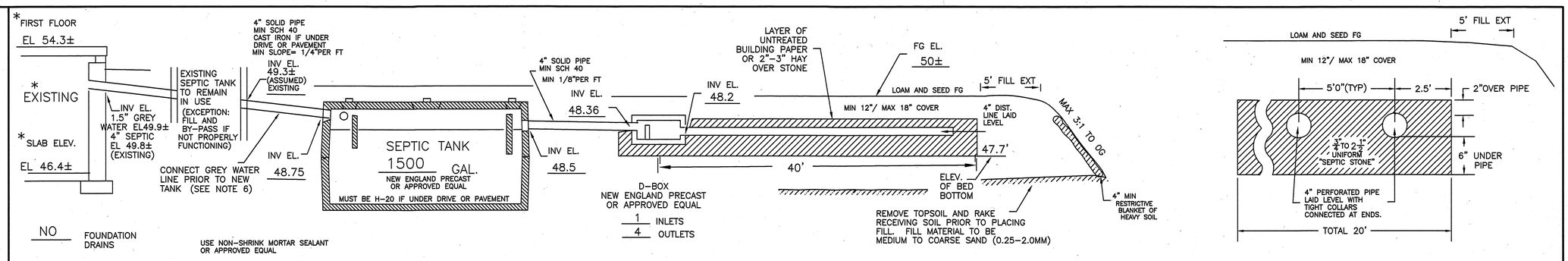

CROSS SECTION DISPOSAL SYSTEM – NOT TO SCALE

PLAN : 1"=20'

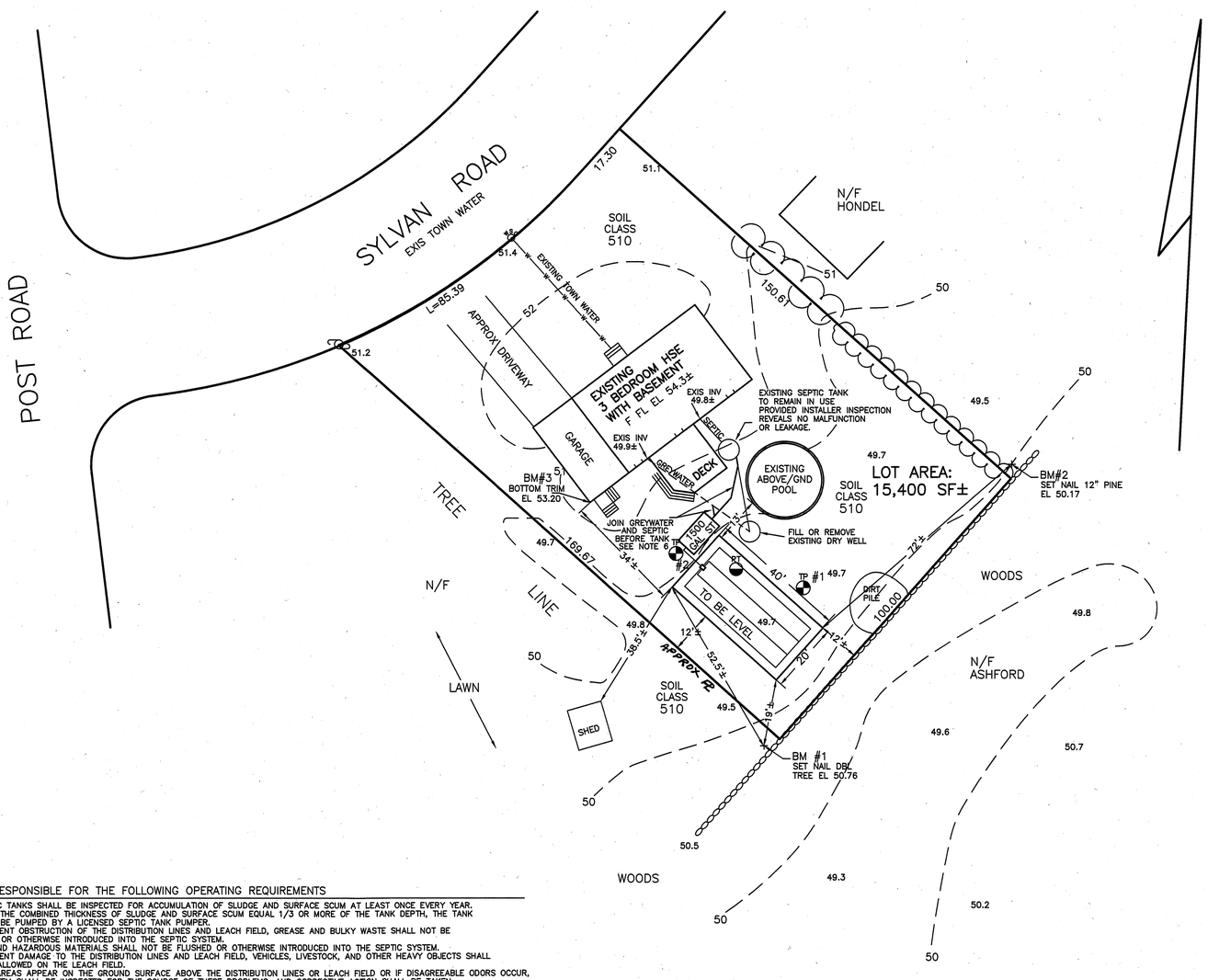

SYSTEM OWNER IS RESPONSIBLE FOR THE FOLLOWING OPERATING REQUIREMENTS

ENV–WS 1023.01 (c) SEPTIC TANKS SHALL BE INSPECTED FOR ACCUMULATION OF SLUDGE AND SURFACE SCUM AT LEAST ONCE EVERY YEAR.
(b) WHEN THE COMBINED THICKNESS OF SLUDGE AND SURFACE SCUM EQUAL 1/3 OR MORE OF THE TANK DEPTH, THE TANK SHALL BE PUMPED BY A LICENSED SEPTIC TANK PUMPER.
ENV–WS 1023.02 TO PREVENT OBSTRUCTION OF THE DISTRIBUTION LINES AND LEACH FIELD, GREASE AND BULKY WASTE SHALL NOT BE FLUSHED OR OTHERWISE INTRODUCED INTO THE SEPTIC SYSTEM.
ENV–WS 1023.03 TOXIC AND HAZARDOUS MATERIALS SHALL NOT BE FLUSHED OR OTHERWISE INTRODUCED INTO THE SEPTIC SYSTEM.
ENV–WS 1023.04 TO PREVENT DAMAGE TO THE DISTRIBUTION LINES AND LEACH FIELD, VEHICLES, LIVESTOCK, AND OTHER HEAVY OBJECTS SHALL NOT BE ALLOWED ON THE LEACH FIELD.
ENV–WS 1023.05 IF WET AREAS APPEAR ON THE GROUND SURFACE ABOVE THE DISTRIBUTION LINES OR LEACH FIELD OR IF DISAGREEABLE ODORS OCCUR, THE SYSTEM SHALL BE INSPECTED FOR THE SOURCE OF THESE PROBLEMS, AND CORRECTIVE ACTION SHALL BE TAKEN.

PLOT PLAN

1"=APPROX _____

TEST PIT DATA

DATE: 3/6/02

TOWN INSPECTOR: MIKE CUOMO

TEST PIT #1 EL 49.7

0–10" TOPSOIL
10–28" 10YR4/6 GRAVELLY LOAMY SAND, GRANULAR FRIABLE
28–80" 2.5Y5/4 SLIGHTLY LOAMY SAND, GRANULAR FRIABLE, COARSER WITH DEPTH
NO EVIDENCE OF SHWT, NO OBSERVED WATER, ROOTS TO 54"

TEST PIT #2 EL 50.2

0 –14" TOPSOIL
14–30" 10YR4/6 GRAVELLY FINE SANDY LOAM, GRAN. FRIABLE
30–90" 2.5Y4/6 GRAVELLY MEDIUM TO COARSE SAND, LOOSE, SINGLE GRAIN
NO EVIDENCE OF SHWT, NO OBSERVED WATER, ROOTS TO 54"

PERC TEST DATA

DATE: 3/06/02

PERC RATE: < 2 MIN/IN DEPTH: 24"

DESIGN LOADING: **4 BEDROOMS**

AREA REQUIRED: 750 SQ FT

AREA PROPOSED: 20' X 40' = 800 SF PROVIDED

PROPOSED REPLACEMENT

SEPTIC SYSTEM PLAN

LOCUS: 3 SYLVAN ROAD
NORTH HAMPTON, NH

OWNER: KENNETH & BRENDA WORRELL
3 SYLVAN ROAD
NORTH HAMPTON, NH 03862

NEW HAMPSHIRE Designer of Subsurface Disposal Systems
Ann W. Bialobrzeski No. 348
Water Supply & Pollution Control

APPLICANT:
STOCKTON SERVICES
PO BOX 1306
HAMPTON, NH 03842

DATE: MARCH 17, 2002

APPROVAL: CA2002.041863